NovoDisplay DK550

FPD Product Drawing with WMK

DATE	2019/08/05	REV.	00

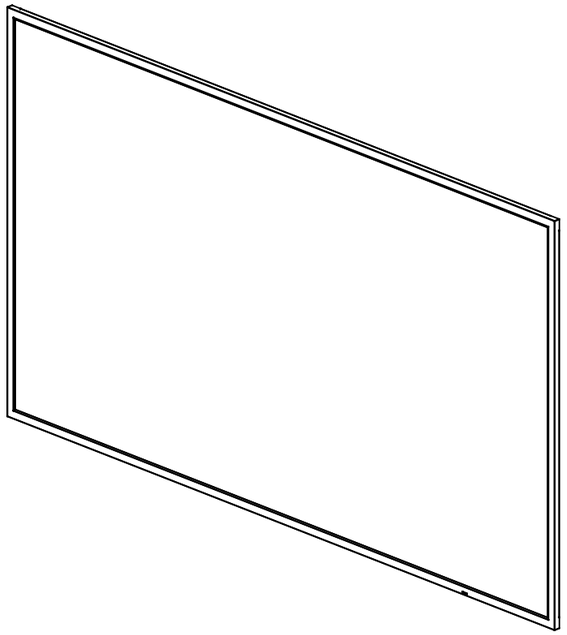

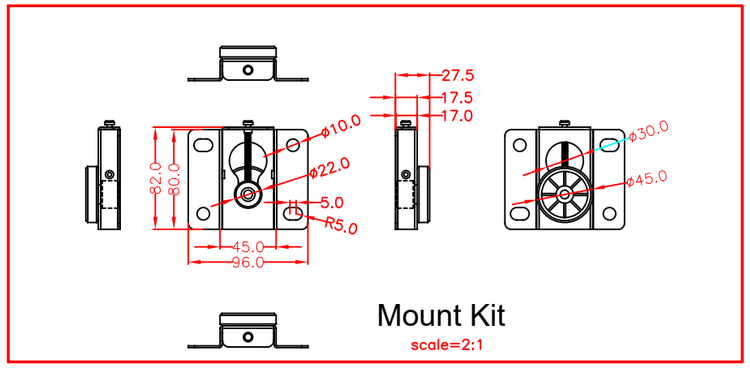

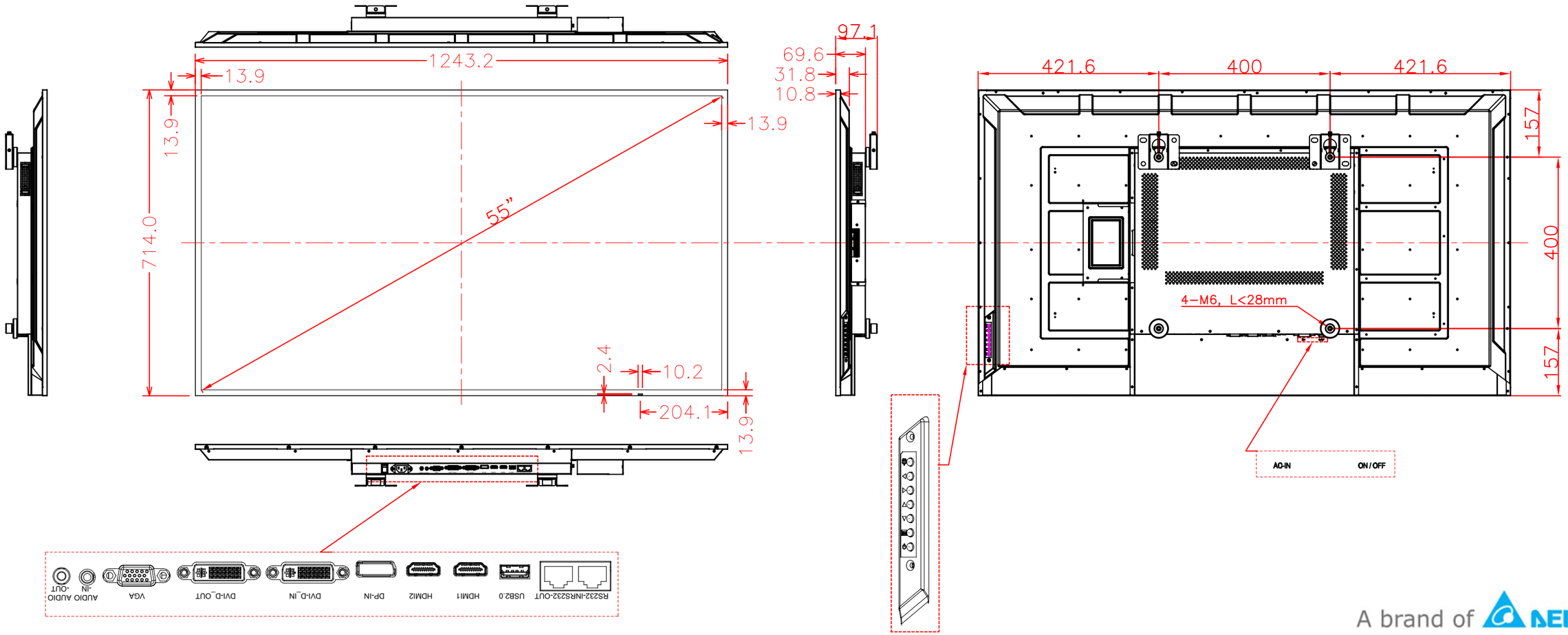

A brand of DELTA